Meet the name
built on

Supreme Trust

M.S. G.I. & BLACK PIPES

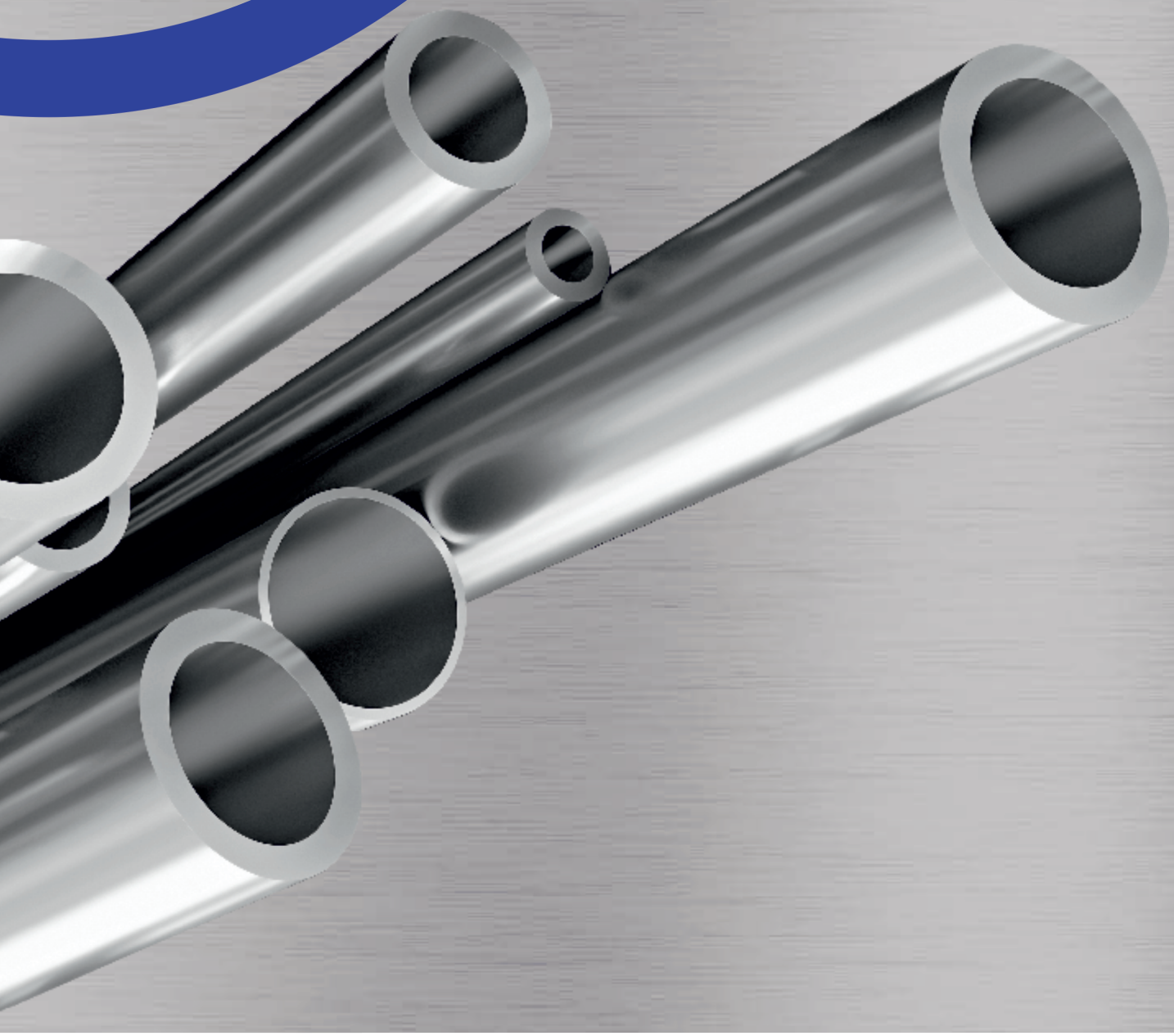

JINDAL SUPREME (INDIA) PVT. LTD.

Supreme Gold

About Us

ABOUT JINDAL GROUP

Jindal family embarked on its entrepreneurial journey way back in 1952. The five brothers Mr. D.S. Jindal , Mr.B.C. Jindal, Mr. O.P. Jindal , Mr. S.R. Jindal & Mr. M.L. Jindal were sons of a farmer Late Shri Netram Jindal of Village Nalwa of district Hisar, Haryana.

The first venture of group was Jindal India Ltd. to manufacture MS ERW and Black Galvanised steel pipes/tubes. Later on, Jindal Industries Ltd was setup in 1964 in Hisar with indigenously designed pipe manufacturing along with Galvanising.

The group always had the conviction that India should be self-reliant in every sector of industry and started acquiring latest industrial technical development and know-how from foreign countries. At present, there are various companies under the flagship of the Jindal Organization, with revenues exceeding 10 BN USD

ABOUT JINDAL SUPREME

Jindal Supreme India was setup in 1974 by Shri M.L. Jindal in Hisar. The firm produces high quality MS Black and Galvanised Pipes/ Tubes in the range of 15 mm to 150 mm conforming to various BIS and British Specifications. The company is fully equipped with modern tube mills, High frequency welding plants & Galvanising plants with in house testing laboratory to produce the best quality steel pipes for various sectors.

Future Plans

- Jindal Supreme has adopted a new medium term business plan covering fiscal year 2018-2021 for improving company's technology, cost and being able to deliver products with global standards.
- Fully Automatic Threading machine with die heads from Kusakabe Japan.
- High speed Tube mill of 15 mm - 65 mm is being procured in technical collaboration with Manfred Germany reaching speeds upto 150 Mtrs / Min with Automatic cold saw.
- Modern Slitting line with width upto 1650 MM speeds upto 100 Mtr / Min
- Ultra modern Galvanizing plant with latest automatic dies with most environmental friendly technologies.
- Automatic facing machine
- Furthermore , the company has already installed Solar Power to ensure a smaller carbon footprint . The expansion will be completed by March 2018 with Galvanizing capacity of 4000 TPM and Tube capacity of 10,000 TPM .

Our Products

JINDAL SUPREME is manufacturing steel pipes for various kind of Structural Applications including line pipes for water transportation, sanitation & various structures that play major roles in the development of urban & rural areas The Pipes are manufactured under integrated management from raw materials to finished products by excellent technologies and various kinds of advanced, highly efficient pipe manufacturing equipments.

Our Strengths

- Our High Credibility - We fulfil our promises and respond sincerely
- Our Advanced technologies - We have distinctive high end automatised equipments from global best
- Our Product Quality - We have High Grade products of consistent quality backed by our manufacturing strength
- Our wealth of Experience - We have been dedicated in steel pipe making for over 50 years growing together with India's manufacturing Industry

Round Tubes

N.B. : 15 mm – 150 mm

Thickness Range : 1.4 mm – 6.0 mm

Length : 3.0 meter – 8.0 meter

APPLICATION

- Liquid Transmission
- Idlers
- Mech. and General Engineering
- Structural
- Water and Sewage
- Water Wells
- Fire Protection
- Poles
- Fencing & Many more…

PRODUCTION STANDARDS

- IS:1239(Part-I)/2004
- EN10255:2004,EN10240:1998
- IS:3601-1984
- IS:1161-1998
- IS:2713-1980

TEST PERFORMED

- Hydrostatic Test
- Eddy Current Test
- Flattening/Flaring Test/Bend Test
- Chemical Analysis
- Other Tests as Required by the Standard

FINISHING OPERATIONS

- Plain end
- Threaded and coupled
- Cut lengths

SURFACE PROTECTION

- Black (self coloured uncoated)
- Outside protective coating oil/varnish
- Hot Dip Galvanized

NOTE: For details please ref. specification sheet.

Black (SELF COLORED UNCOATED)

Oiled/Varnish

Hot Dip Galvanised

Technical Data of MS Black Round Tubes

Specification IS: 1239 (Part -1) 2004 -DIN 2439, DIN 2440, DIN 2441
(Equivalent BS : 1387 : 1985 / EN 10255 : 2004 / EN 10240 : 1998 / DIN 2444)

NB and Series		Outside Diameter		Wall Thikness		Nominal Weight			
		Min.	Max			Plain End		Screwed & Socketed	
		mm	mm	mm	SWG	Kg/M	Meters/Tonne	Kg/M	Meters/Tonne
15	L	21.0	21.4	2.0	14	0.95	1052	0.96	1046
	M	21.0	21.8	2.6	12	1.21	826	1.22	820
	H	21.0	21.8	3.2	10	1.44	694	1.45	690
20	L	26.4	26.9	2.3	13	1.38	725	1.39	719
	M	26.5	27.3	2.6	12	1.56	641	1.57	637
	H	26.5	27.3	3.2	10	1.87	535	1.88	532
25	L	33.2	33.8	2.6	12	1.98	505	2.00	500
	M	33.3	34.2	3.2	10	2.41	415	2.43	411.5
	H	33.3	34.2	4.0	8	2.93	341	2.95	339
32	L	41.9	42.5	2.6	12	2.54	394	2.57	389
	M	42.0	42.9	3.2	10	3.1	322	3.13	319
	H	42.0	42.9	4.0	8	3.79	264	3.82	262
40	L	47.8	48.4	2.9	11	3.23	310	3.27	306
	M	47.8	48.8	3.2	10	3.56	281	3.60	278
	H	47.9	48.8	4.0	8	4.37	229	4.41	227
50	L	59.6	60.2	2.9	11	4.08	245	4.15	241
	M	59.7	60.8	3.6	9	5.03	199	5.10	196
	H	59.7	60.8	4.5	7	6.19	161	6.26	160
65	L	75.2	76	3.2	10	5.74	175	5.83	171.5
	M	75.3	76.6	3.6	9	6.42	156	6.54	153
	H	75.3	76.6	4.5	7	7.93	126	8.05	124
80	L	87.9	88.7	3.2	10	6.72	149	6.89	145
	M	88.0	89.5	4.0	8	8.36	120	8.53	117
	H	88.0	89.5	4.8	6	9.9	101	10.10	96
100	L	113.0	113.9	3.6	9	9.75	102	10.00	100
	M	113.1	115	4.5	7	12.2	82	12.50	80
	H	113.1	115	5.4	5	14.5	69	14.80	67.5
125	M	138.5	140.8	4.8	6	15.9	63	16.40	61
	H	138.5	140.8	5.4	5	17.9	56	18.40	54
150	M	163.9	166.5	4.8	6	18.9	53	19.50	51
	H	163.9	166.5	5.4	5	21.3	47	21.90	46

Thickness & Mass are applicable for Black & Galvanised Steel Tubes as per clause 8.1.1 of IS : 1239 (Part-1) 2004

This specification conforms to CE Mark conferred Det Norske Veritas, Netherlands.

Tolerance

A - Thickness	Tolerance	B- Weight	Tolerance	Length Tolerance
1. Light Tubes	+ not limited -8%	1. Single Tube (Light Series)	+10% -8%	
2. Medium & Heavy Tubes	+ not limited -10%	2. Single Tube (Medium & Heavy Series)	±10%	Unless otherwise Specified 4 to 7 mtrs. Can also be supplied in Fix Lengths ±5cm.
		3. For quantities per load of 10 tonnes minimum (Light Series)	+7.5% - 5%	
		4. For quantities per load of 10 tonnes minimum (Medium and Heavy Series)	±7.5%	

Hollow Sections

Size: (RHS): 25 * 15 - 80 * 40
(SHS): 15 * 15 – 60 * 60
Thickness: 1.2 mm to 3.5 mm
Lenght: 3.0 meter to 8 meter

APPLICATIONS

- Construction
- Machinery
- Automotive
- Furniture
- Storage System
- Transmission Tower

PRODUCTION STANDARDS

- IS4932:1997
- EN10219-1:2006

TESTS PERFORMED

- Visual and Dimensional Insp.
- Tensile Test
- Flatting and Flaring Test
- Impact Test
- Chemical Analysis
- Plain End-square cut
- Cut Lengths

SURFACE PROTECTION

- Black (Self Coloured uncoated)
- Varnish/Oil Coating
- Hot Dip Galvanized

Black (SELF COLORED UNCOATED)

Oiled/Varnish

Hot Dip Galvanised

Rectangular Hollow Section (RHS) IS : 4923 : 1997/EN 10219-1 : 2006*ASTM A-500

RHS	D	B	Thickness	Sec Area	Unit Wt	Momenat of Inertia		Radius of Gyration		Elastic Modulus		Torsional	Constants	Outer Surface Area Per Metre Length
DXB			T	A	W	I_{xx}	I_{yy}	R_{xx}	R_{yy}	Z_{xx}	Z_{yy}	I_T	C_T	
mm	mm	mm	mm	mm2	kg/m	cm4	cm4	cm	cm	cm3	cm3	cm4	cm3	m2/m
25 X 15	25	15	0.8	0.60	0.47	0.53	0.19	0.95	0.56	0.40	0.28	0.45	0.48	0.077
	25	15	1.0	0.73	0.58	0.64	0.22	0.93	0.55	0.48	0.33	0.55	0.57	0.077
	25	15	1.2	0.87	0.68	0.74	0.25	0.92	0.54	0.56	0.37	0.64	0.65	0.076
	25	15	1.4	0.99	0.78	0.82	0.28	0.91	0.53	0.62	0.42	0.72	0.73	0.075
	25	15	1.6	1.11	0.87	0.90	0.30	0.90	0.52	0.68	0.45	0.79	0.79	0.075
	25	15	1.8	1.23	0.96	0.96	0.32	0.89	0.51	0.73	0.48	0.86	0.85	0.074
	25	15	2.0	1.34	1.05	1.02	0.34	0.87	0.51	0.77	0.51	0.92	0.90	0.073
	25	15	2.2	1.44	1.13	1.07	0.36	0.86	0.50	0.81	0.53	0.97	0.94	0.072
30 X 20	30	20	1.2	0.92	0.90	1.92	0.66	1.45	0.85	0.96	0.66	1.58	1.13	0.117
	30	20	1.4	1.13	1.05	2.33	0.80	1.43	0.84	1.17	0.80	1.93	1.38	0.117
	30	20	1.6	1.35	1.19	2.73	0.92	1.42	0.83	1.36	0.92	2.27	1.60	0.116
	30	20	1.8	1.55	1.33	3.09	1.04	1.41	0.82	1.55	1.04	2.59	1.81	0.115
	30	20	2.0	1.75	1.47	3.43	1.15	1.40	0.81	1.72	1.15	2.89	2.01	0.115
	30	20	2.2	1.95	1.60	3.75	1.25	1.39	0.80	1.88	1.25	3.18	2.19	0.114
	30	20	2.5	2.14	1.80	4.05	1.34	1.38	0.79	2.02	1.34	3.45	2.36	0.113
	30	20	2.8	2.32	2.00	4.32	1.43	1.36	0.78	2.16	1.43	3.71	2.51	0.112
	30	20	3.2	2.59	2.25	4.69	1.54	1.35	0.77	2.35	1.54	4.06	2.72	0.111
40 X 25	40	25	0.8	1.00	0.78	2.23	1.08	1.49	1.04	1.11	0.87	2.30	1.44	0.127
	40	25	1.0	1.23	0.97	2.72	1.32	1.48	1.03	1.36	1.05	2.83	1.75	0.127
	40	25	1.2	1.47	1.15	3.18	1.54	1.47	1.02	1.59	1.23	3.34	2.05	0.126
	40	25	1.4	1.69	1.33	3.61	1.74	1.46	1.01	1.81	1.39	3.83	2.33	0.125
	40	25	1.6	1.91	1.50	4.02	1.93	1.45	1.01	2.01	1.55	4.29	2.59	0.125
	40	25	1.8	2.13	1.67	4.41	2.11	1.44	1.00	2.21	1.69	4.74	2.84	0.124
	40	25	2.0	2.34	1.83	4.77	2.28	1.43	0.99	2.39	1.82	5.17	3.07	0.123
	40	25	2.2	2.54	2.00	5.11	2.43	1.42	0.98	2.56	1.95	5.58	3.29	0.122
	40	25	2.5	2.84	2.23	5.57	2.64	1.40	0.96	2.79	2.11	6.15	3.59	0.121
50 X 25	50	25	2.0	2.74	2.15	8.38	2.81	1.75	1.01	3.35	2.25	7.06	3.92	0.143
	50	25	2.6	3.46	2.71	10.16	3.36	1.71	0.99	4.06	2.69	8.68	4.72	0.141
	50	25	3.2	4.13	3.24	11.63	3.80	1.68	0.96	4.65	3.04	10.08	5.38	0.139
	50	25	4.0	4.95	3.88	13.13	4.23	1.63	0.92	5.25	3.38	11.57	6.05	0.136
60 X 40	60	40	2.6	4.76	3.73	22.76	12.09	2.19	1.59	7.59	6.05	25.99	10.02	0.191
	60	40	2.9	5.25	4.12	24.75	13.12	2.17	1.58	8.25	6.56	28.48	10.90	0.190.
	60	40	3.6	6.35	4.98	28.90	15.23	2.13	1.55	9.63	7.62	33.86	12.73	0.188
	60	40	4.5	7.67	6.02	33.31	17.44	2.08	1.51	11.10	8.72	39.91	14.69	0.185
66 X 33	66	33	2.6	4.70	3.69	25.16	8.43	2.31	1.34	7.62	5.11	21.17	8.91	0.189
	66	33	2.9	5.19	4.07	27.13	9.12	2.30	1.33	8.28	5.53	23.13	9.66	0.186
	66	33	3.6	6.28	4.93	31.87	10.52	2.25	1.29	9.66	6.38	27.32	11.21	0.186
	66	33	4.5	7.58	5.95	36.64	11.93	2.20	1.25	11.10	7.23	31.90	12.84	0.183
80 X 40	80	40	2.6	5.80	4.55	46.58	15.74	2.84	1.65	11.65	7.87	38.87	13.66	0.231
	80	40	2.9	6.41	5.03	50.87	17.11	2.82	1.63	12.72	8.56	42.65	14.89	0.230
	80	40	3.2	7.01	5.50	54.95	18.41	2.80	1.62	13.74	9.21	46.28	16.05	0.229
	80	40	4.0	8.55	6.71	64.80	21.49	2.75	1.59	16.20	10.74	55.24	18.84	0.226
	80	40	4.8	10.01	7.85	73.22	24.03	2.71	1.55	18.31	12.02	63.16	21.21	0.224

Square Hollow Section (SHS) IS : 4923 : 1997/EN 10219-1 : 2006*/ A-500

RHS	D	B	Thickness	Sec Area	Unit Wt	Momenat of Inertia		Radius of Gyration		Elastic Modulus		Torsional	Constants	Outer Surface Area Per Metre Length
DXB			T	A	W	I_{xx}	I_{yy}	R_{xx}	R_{yy}	Z_{xx}	Z_{yy}	I_T	C_T	
mm	mm	mm	mm	mm2	kg/m	cm4	cm4	cm	cm	cm3	cm3	cm4	cm3	m2/m
15 X 15	15	15	0.6	0.34	0.26	0.11	0.11	0.58	0.58	0.15	0.15	0.18	0.23	0.058
	15	15	0.8	0.44	0.34	0.14	0.14	0.57	0.57	0.19	0.19	0.24	0.29	0.057
	15	15	1.0	0.53	0.42	0.17	0.17	0.56	0.56	1.23	1.23	0.28	0.34	0.057
	15	15	1.2	0.63	0.49	0.19	0.19	0.55	0.55	0.26	0.26	0.33	0.39	0.056
	15	15	1.4	0.71	0.56	0.21	0.21	0.54	0.54	0.28	0.28	0.37	0.43	0.055
	15	15	1.6	0.79	0.62	0.23	0.23	0.53	0.53	0.30	0.30	0.46	0.51	0.053
20 X 20	20	20	0.6	0.46	0.36	0.28	0.28	0.79	0.79	0.28	0.28	0.45	0.43	0.078
	20	20	0.8	0.60	0.47	0.36	0.36	0.78	0.78	0.36	0.36	0.58	0.54	0.077
	20	20	1.0	0.73	0.58	0.43	0.43	0.77	0.77	0.43	0.43	0.70	0.65	0.077
	20	20	1.2	0.87	0.68	0.50	0.50	0.76	0.76	0.50	0.50	0.82	0.75	0.076
	20	20	1.4	0.99	0.78	0.56	0.56	0.75	0.75	0.56	0.56	0.93	0.84	0.075
	20	20	1.6	1.11	0.87	0.61	0.61	0.74	0.74	0.61	0.61	1.03	0.92	0.075
	20	20	1.8	1.23	0.96	0.65	0.65	0.73	0.73	0.65	0.65	1.13	1.00	0.074
	20	20	2.0	1.34	1.05	0.69	0.69	0.72	0.72	0.69	0.69	1.21	1.06	0.073
	20	20	2.2	1.44	1.13	0.73	0.73	0.71	0.71	0.73	0.73	1.29	1.12	0.072
25 X 25	25	25	1.6	1.43	1.12	1.28	1.28	0.94	0.94	1.02	1.02	2.12	1.54	0.096
	25	25	2.0	1.74	1.36	1.48	1.48	0.92	0.92	1.19	1.19	2.53	1.80	0.093
	25	25	2.6	2.16	1.69	1.72	1.72	0.89	0.89	1.38	1.38	3.04	2.12	0.091
	25	25	3.2	2.53	1.98	1.89	1.89	0.86	0.86	1.51	1.51	3.45	2.34	0.089
32 X 32	32	32	2.0	2.30	1.80	3.37	3.37	1.21	1.21	2.10	2.10	5.58	3.18	0.121
	32	32	2.6	2.88	2.26	4.02	4.02	1.18	1.18	2.51	2.51	6.86	3.82	0.119
	32	32	3.2	3.42	2.69	4.54	4.54	1.15	1.15	2.84	2.84	7.96	4.34	0.117
38 X 38	38	38	2.0	2.78	2.18.	5.88	5.88	1.46	1.46	3.10	3.10	9.60	4.67	0.145
	38	38	2.6	3.51	2.75	7.14	7.14	1.43	1.43	3.76	3.76	11.93	5.69	0.143
	38	38	3.2	4.19	3.29	8.18	8.18	1.40	1.40	4.30	4.30	14.01	6.55	0.141
	38	38	4.0	5.03	3.95	9.26	9.26	1.36	1.36	4.87	4.87	16.38	7.48	0.138
40 X 40	40	40	2.6	3.72	2.92	8.45	8.45	1.51	1.51	4.23	4.23	14.06	6.39	0.151
	40	40	2.9	4.09	3.21	9.12	9.12	1.49	1.49	4.56	4.56	15.34	6.91	0.150
	40	40	3.2	4.45	3.49	9.72	9.72	1.48	1.48	4.86	4.86	16.55	7.39	0.149
	40	40	4.0	5.35	4.20	11.08	11.08	1.44	1.44	5.54	5.54	19.44	8.48	0.146
49.5 X 49.5	49.5	49.5	2.6	4.70	3.69	16.91	16.91	1.90	1.90	6.83	6.83	27.59	10.31	0.189
	49.5	49.5	2.9	5.19	4.07	18.37	18.37	1.88	1.88	7.42	7.42	30.26	11.21	0.188
	49.5	49.5	3.6	6.28	4.93	21.42	21.42	1.85	1.85	8.66	8.66	36.07	13.12	0.186
	49.5	49.5	4.5	7.58	5.96	24.64	24.64	1.80	1.80	6.96	6.96	42.66	15.19	0.183
60 X 60	60	60	2.6	5.80	4.55	31.33	31.33	2.33	2.33	10.44	10.44	50.38	15.72	0.231
	60	60	2.9	6.41	5.03	34.21	34.21	2.31	2.31	11.40	11.40	55.44	17.18	0.230
	60	60	3.2	7.01	5.50	36.94	36.94	2.30	2.30	12.31	12.31	60.34	18.57	0.229
	60	60	4.0	8.55	6.71	43.55	43.55	2.26	2.26	14.52	14.52	72.64	21.97	0.226
	60	60	4.8	10.01	7.85	49.22	49.22	2.22	2.22	16.41	16.41	83.81	24.94	0.224

Our Quality

Quality has always been synonymous with customer satisfaction and that's how we aim at it. Stringent quality checks, ISO Compliance and rigorous product testing we do is all for the sake of unparallel quality.

Raw Material Quality Tests

- Tensile
- Chemical
- Physical (Visual) Inspection
- Thickness Measurement.

Raw Material Quality Tests

- Destructive Testing(Flattering /Flaring)
- Length Measurement
- Visual Dimensional
- Hydro Testing
- Bend Test

Technological Upgradation

- Cold Saws
- Rotary Sizing Mill
- Automatic Threading Machine
- Automatic Facing Machine
- CNC Machines for Re-Profiling of tools

BIS APPROVALS

IS : 1239 2004 (Part 1)

ERW Mild Steel Tubes and Galvanised from 15mm NB upto and including 100mm NB in Light Class and 15mm NB upto and including 150mm NB in Medium and Heavy Class, Plain as well as Socketed Ends as per IS:1239 (Part–I)/2004.

IS : 1161 1998

ERW Steel Tubes for Sructural Purposes conforming to IS: 1161/1998. Sizes from 15mm to 150mm NB, Light, Medium & Heavy, in grade YST 210,240 & 310.

IS : 2713 1980

ERW Steel Tubes for Pole manufactured as per Indian Standard of IS 2713 of 1980 Part (I,II & III). The poles are made from high quality steel of ultimate tensile strength 42 kgf/mm^2.

IS : 4923 1997

ERW Hollow Steel Sections for Structural use as per IS:4923/1997. Covering all sizes and grades and thickness upto 6.00mm. The grades are YST 210, 240 & 310.

METAL BEAM CRASH BARRIER

Expanding to Global Expectations

Jindals that Spread aspring wings to respond to the global demands of Life.
The Company is now operating in eight verticals, namely:

- Metal Beam Crash Barrier

Ensuring Safety to Life .....

We undertake design, manufacturing and supply of a wide range of metal beam crash barrier under stringent quality control.
It is based on the guidelines issued by the Ministry of Road Transport and Highways.
Jindals offers every possible range of **'W' Beam and 'Thrie' Beam** type steel crash barrier systems with necessary anchorage facilities.
The basic functions of Metal beam crash barrier are to absorb the impact energy of the collecting vehicle thus minimizing extend of risk and damage to the vehicles and its passengers.
Besides, it prevents the vehicles from rolling down the high embankments and veering off the carriageway.

THRIE BEAM

Single Side Single Barrier

Double Side Single Barrier

Single Side Double Barrier

Double Side Double Barrier

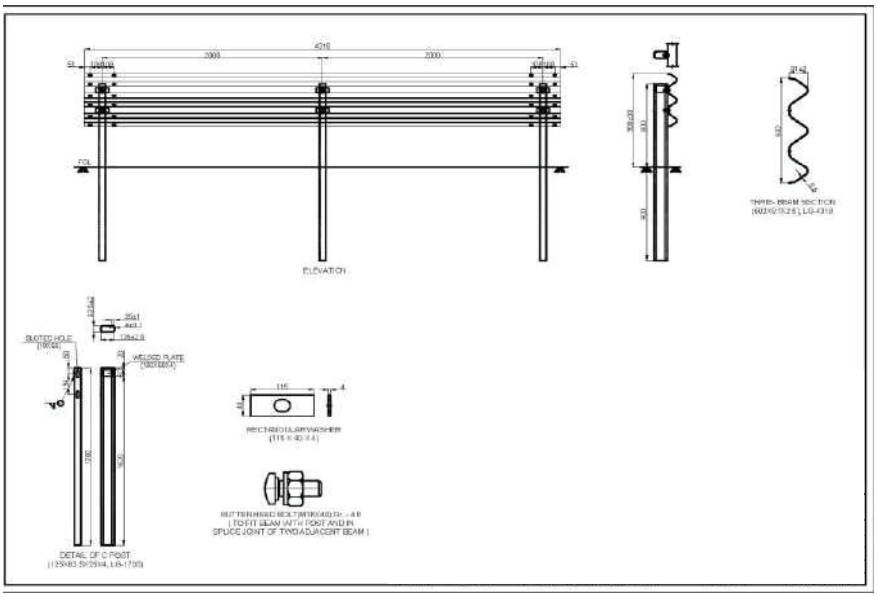

Specification

- ★ Thickness 3mm/2.8mm/2.67mm
- ★ Raw materials conforming to IS 5986/2062/10748 or equivalent of grade.
- ★ Hot deep galvanized to 550gsm/sq.m
- ★ Overall length 4318mm/3318mm/as per customized drawing
- ★ Effective Length : 4000mm/3000mm
- ★ Width : 506mm

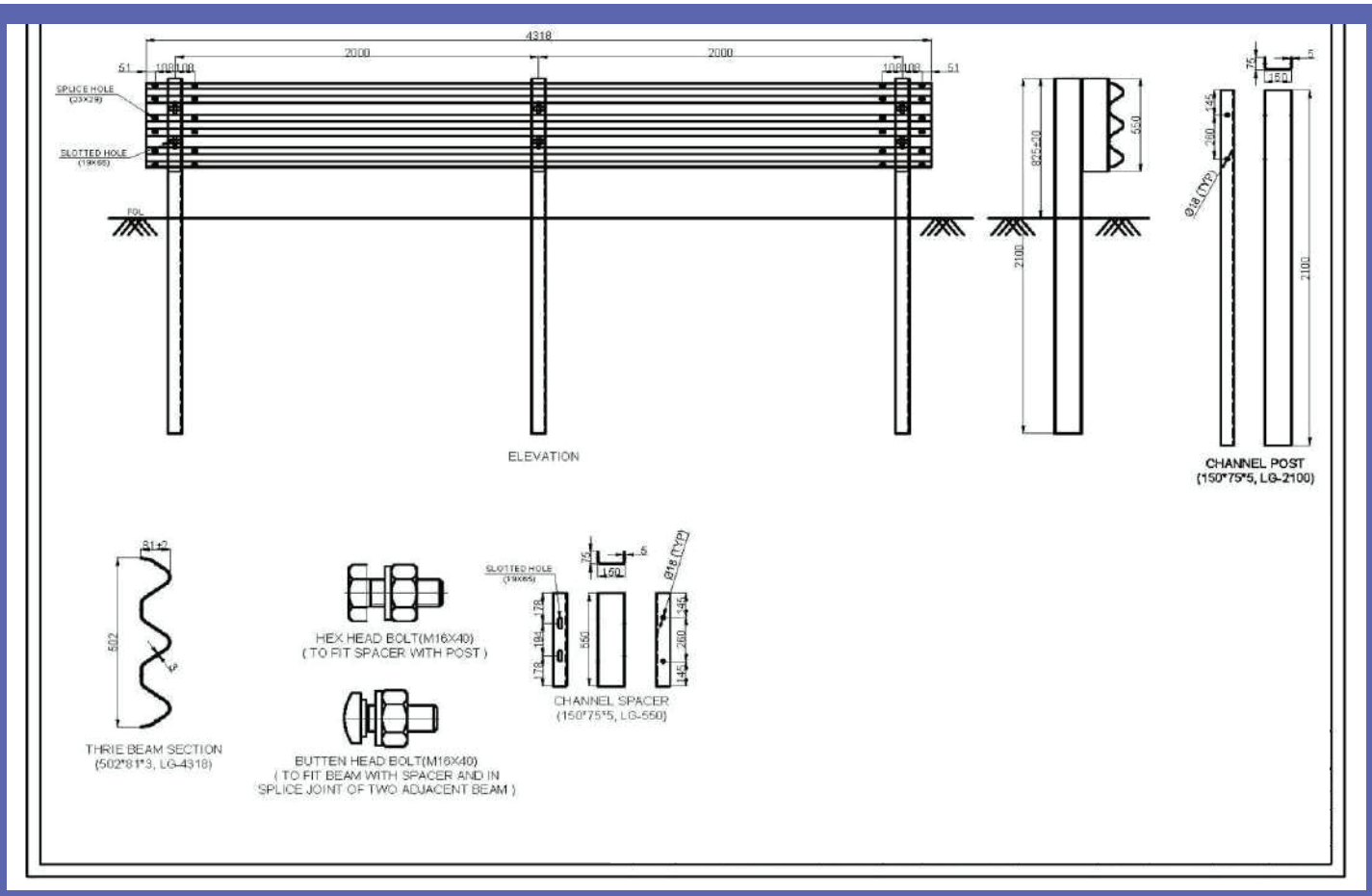

OUR PRODUCT RANGE

W BEAM

Single Side Single Barrier

Double Side Single Barrier

Single Side Double Barrier

Double Side Double Barrier

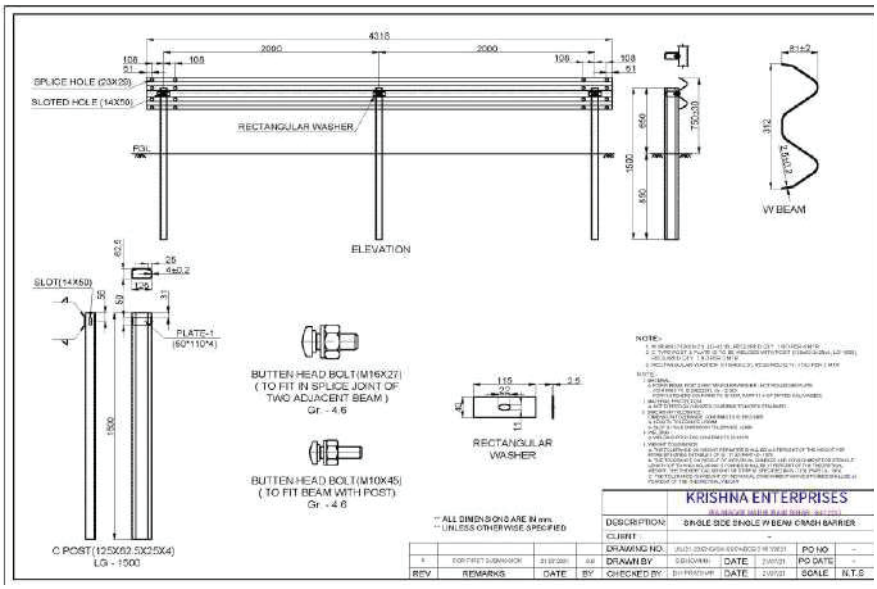

Specification

- ★ Cold roll formed in thickness 3mm/2.8mm/2.67mm
- ★ Raw materials conforming to IS 5986/2062/10748 or equivalent of grade.
- ★ Fe360/Fe410/Fe510
- ★ Hot deep galvanized to 550gsm/sq.m
- ★ Overall length 4318mm/3318mm/as per customized drawing
- ★ Effective Length : 4000mm/3000mm
- ★ Width : 311mm

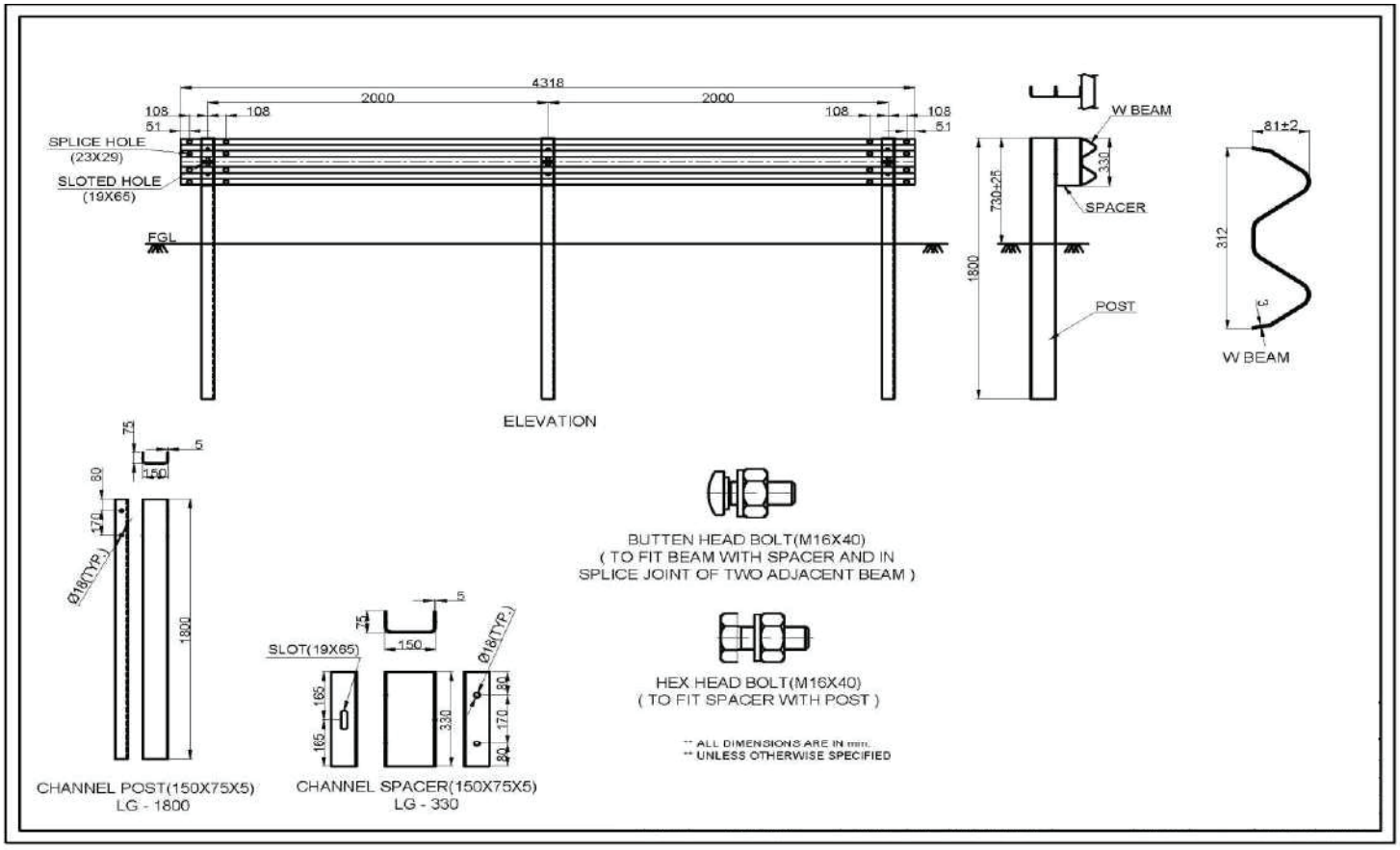

Branch Office
Building No. 3, Third Floor
Local Shopping Centre
Sector-B, Pocket-1, Vasant Kunj
New Delhi - 110070
Phone No. +91-11-40729533
CIN : U27109HR1974PTC007126

Mfg. Unit:
9th K.M., O.P. Jindal Marg,
Hissar-125006, Haryana
Phone: 01662-220278, 220257, 220645
Fax.: 01662-220267

Contact Us:
info@jindalsupreme.com
www.jindalsupreme.com